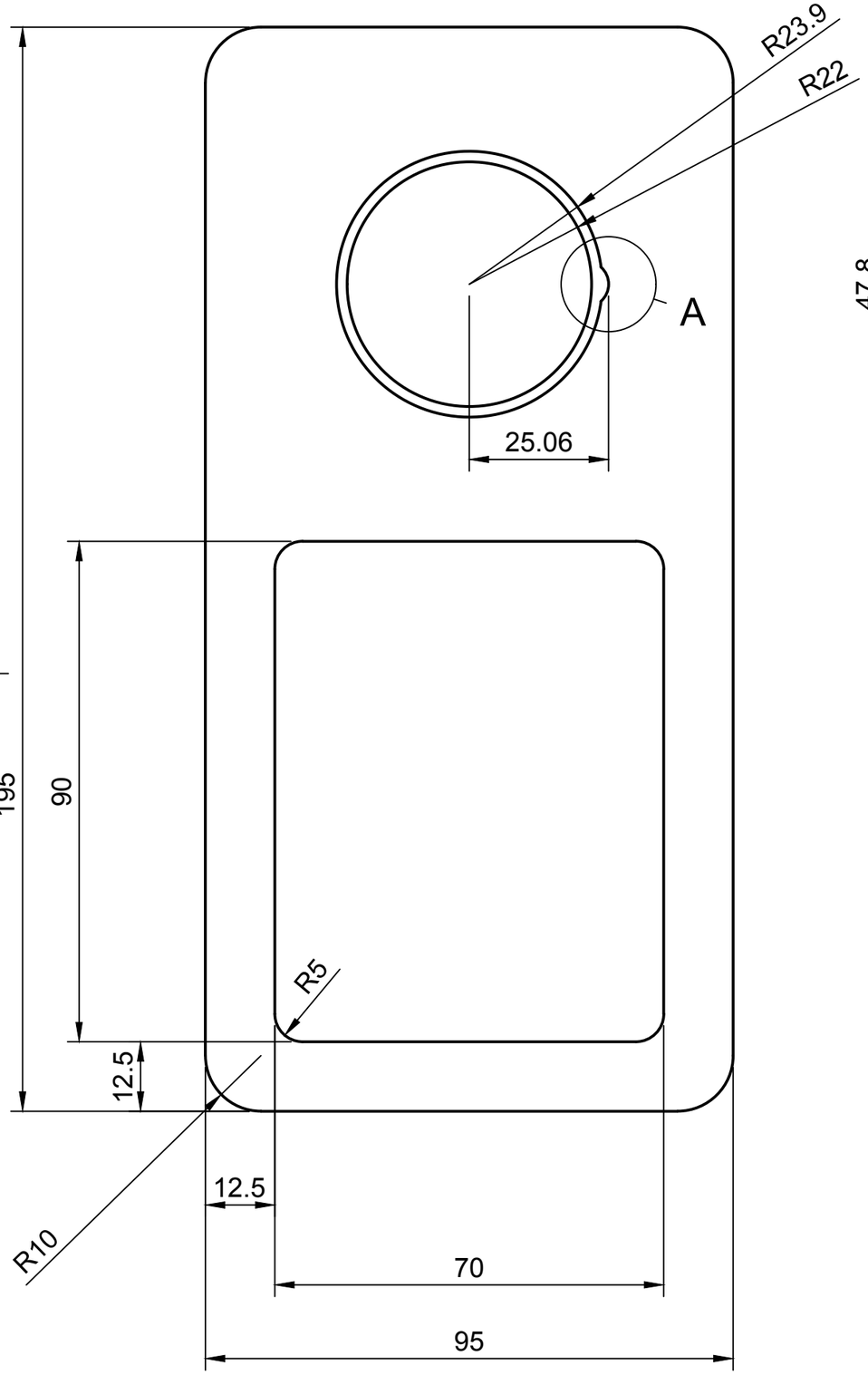
R23.9
R22
A
25.06
195
90
R5
12.5
R10
12.5
70
95

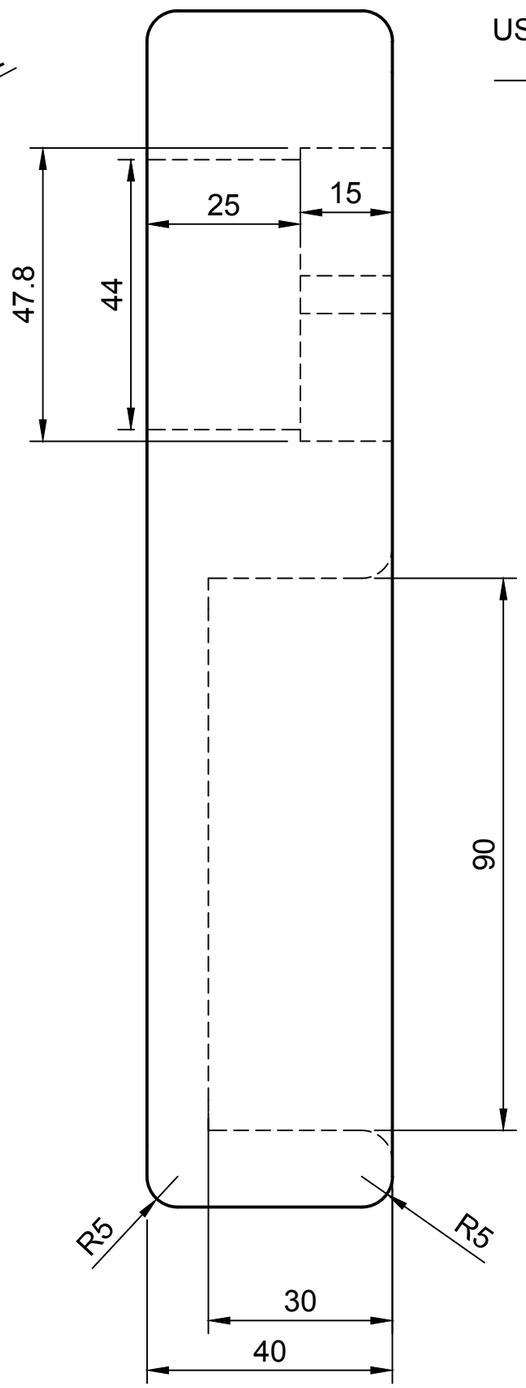
47.8
44
25
15
90
R5
R5
30
40

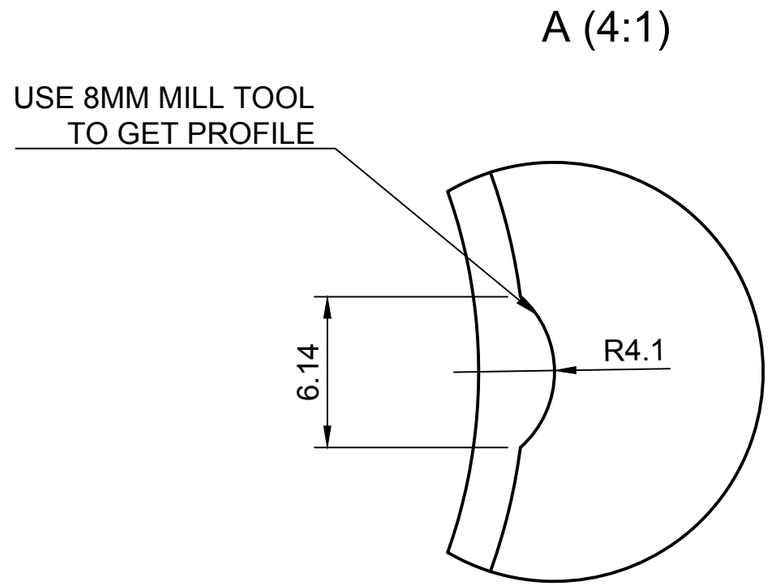
A (4:1)
USE 8MM MILL TOOL
TO GET PROFILE
6.14
R4.1